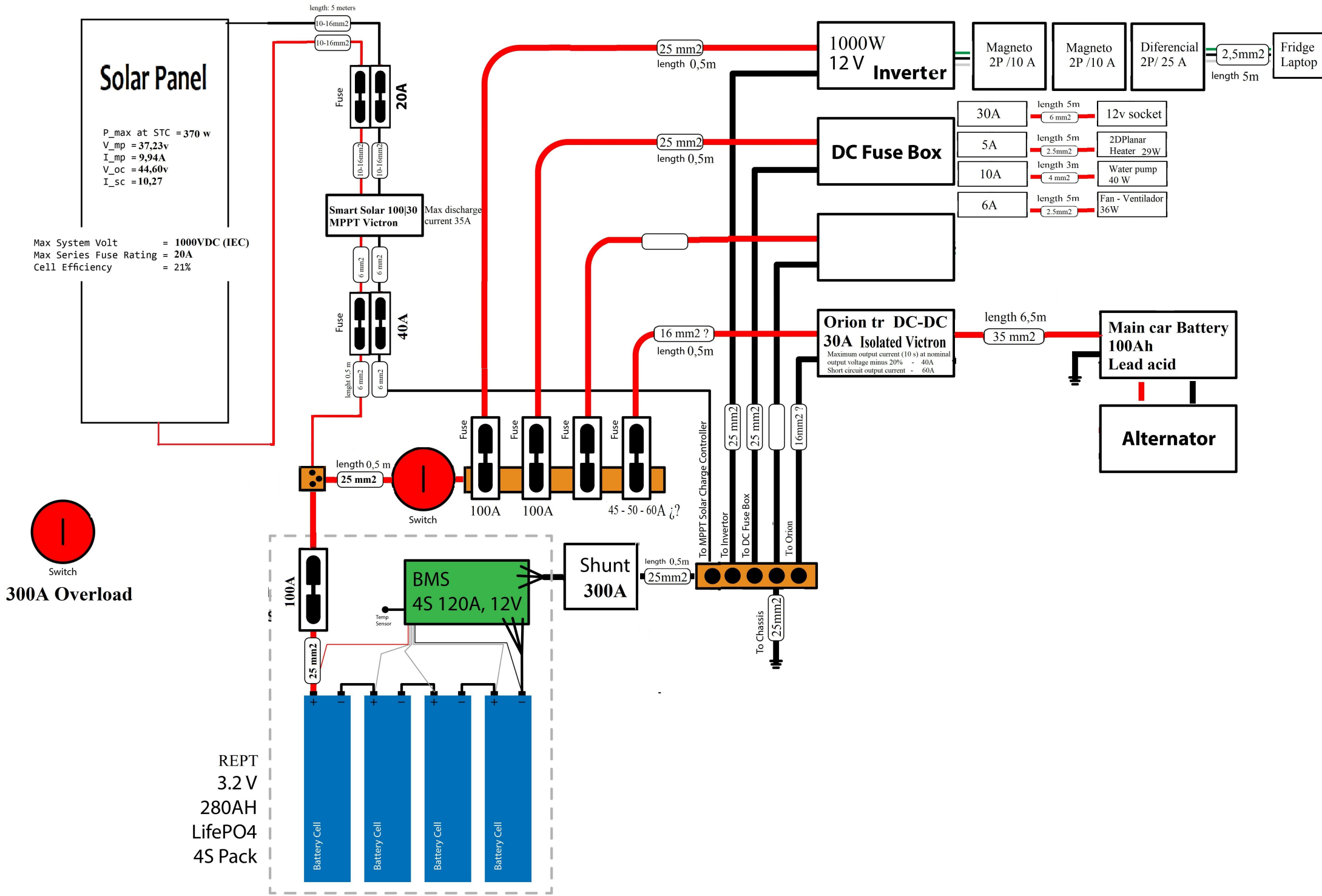
Solar Panel
P_max at STC = 370 w
V_mp = 37,23v
I_mp = 9,94A
V_oc = 44,60v
I_sc = 10,27
Max System Volt = 1000VDC (IEC)
Max Series Fuse Rating = 20A
Cell Efficiency = 21%
length: 5 meters
10-16mm2
10-16mm2
Fuse
20A
10-16mm2
10-16mm2
Smart Solar 100|30 MPPT Victron
Max discharge current 35A
6 mm2
6 mm2
Fuse
40A
lenght 0,5 m
6 mm2
6 mm2
25 mm2
length 0,5m
1000W 12 V Inverter
Magneto 2P /10 A
Magneto 2P /10 A
Diferencial 2P/ 25 A
2,5mm2
length 5m
Fridge Laptop
25 mm2
length 0,5m
DC Fuse Box
30A
length 5m
6 mm2
12v socket
5A
length 5m
2.5mm2
2DPlanar Heater 29W
10A
length 3m
4 mm2
Water pump 40 W
6A
length 5m
2.5mm2
Fan - Ventilador 36W
16 mm2 ?
length 0,5m
Orion tr DC-DC 30A Isolated Victron
Maximum output current (10 s) at nominal output voltage minus 20% - 40A
Short circuit output current - 60A
length 6,5m
35 mm2
Main car Battery 100Ah Lead acid
Alternator
Fuse
Fuse
Fuse
Fuse
100A
100A
45 - 50 - 60A ¿?
length 0,5 m
25 mm2
Switch
Switch
300A Overload
To MPPT Solar Charge Controller
To Invertor
To DC Fuse Box
To Orion
25 mm2
25 mm2
16mm2 ?
100A
25 mm2
BMS 4S 120A, 12V
Temp Sensor
Shunt 300A
length 0,5m
25mm2
To Chassis
25mm2
REPT
3.2 V
280AH
LifePO4
4S Pack
Battery Cell
Battery Cell
Battery Cell
Battery Cell