50Amp RV Inverter
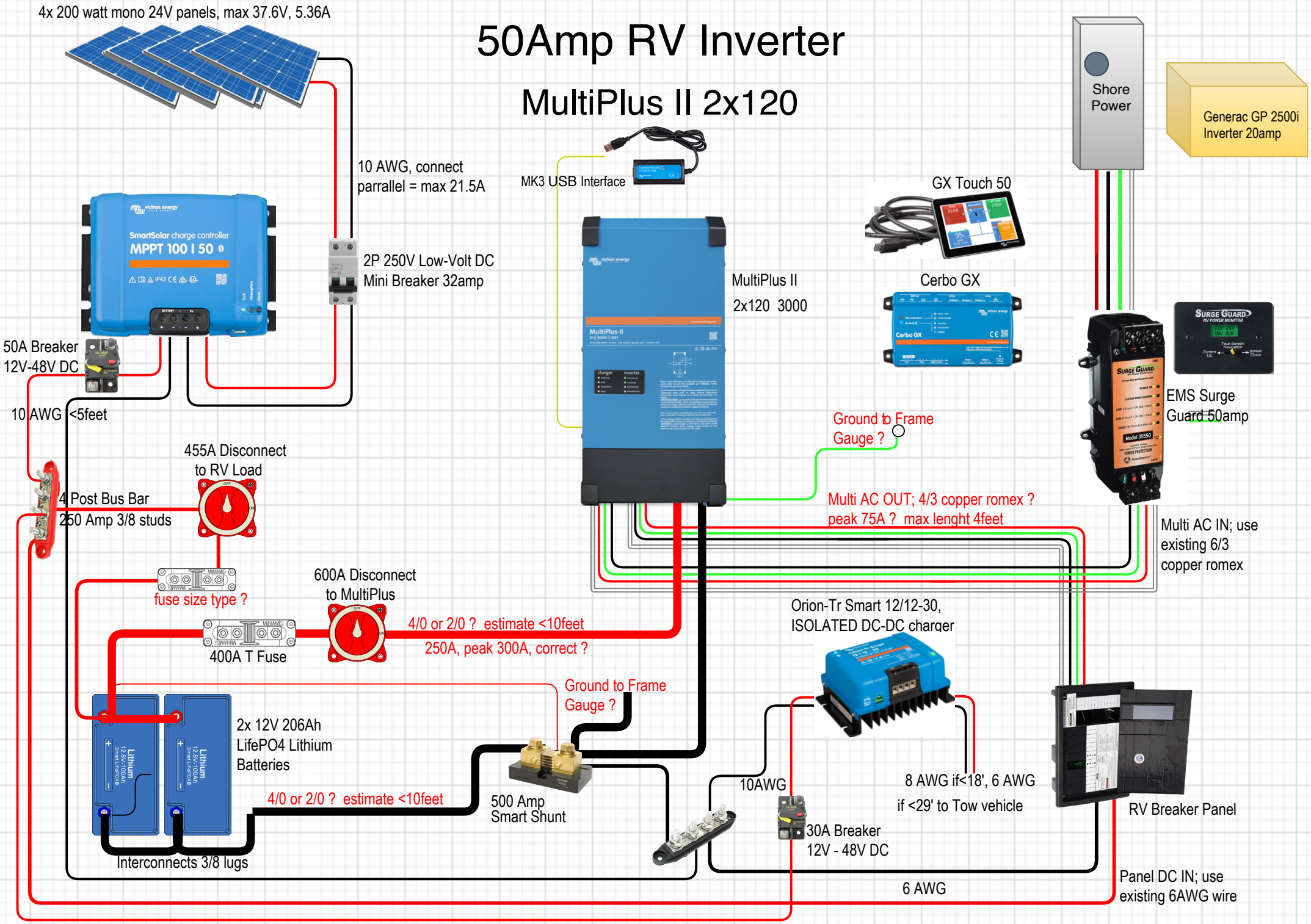
MultiPlus II 2x120