YOT CLUB - 48 V Battery Connections Diagram

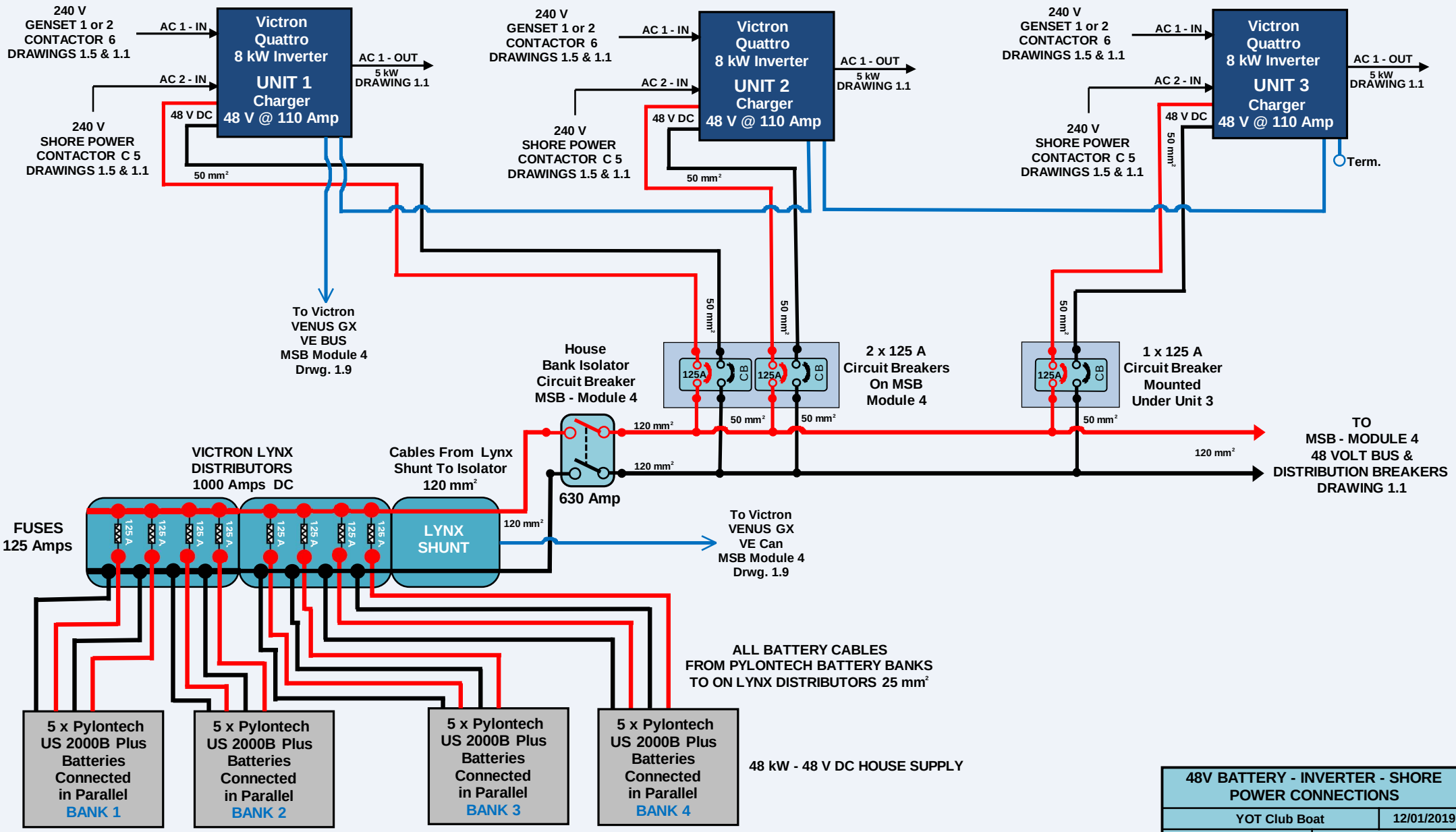

48V BATTERY - INVERTER - SHORE POWER CONNECTIONS	
YOT Club Boat	12/01/2019
DRAWN: J. MEYER - Rev. 4	DRAWING NO. 1.3
DESIGN: Meyer/Ross	FOR: G.Wharington & D. Fisher