10KW 3 Phase Configuration - With Factor 1 Rule

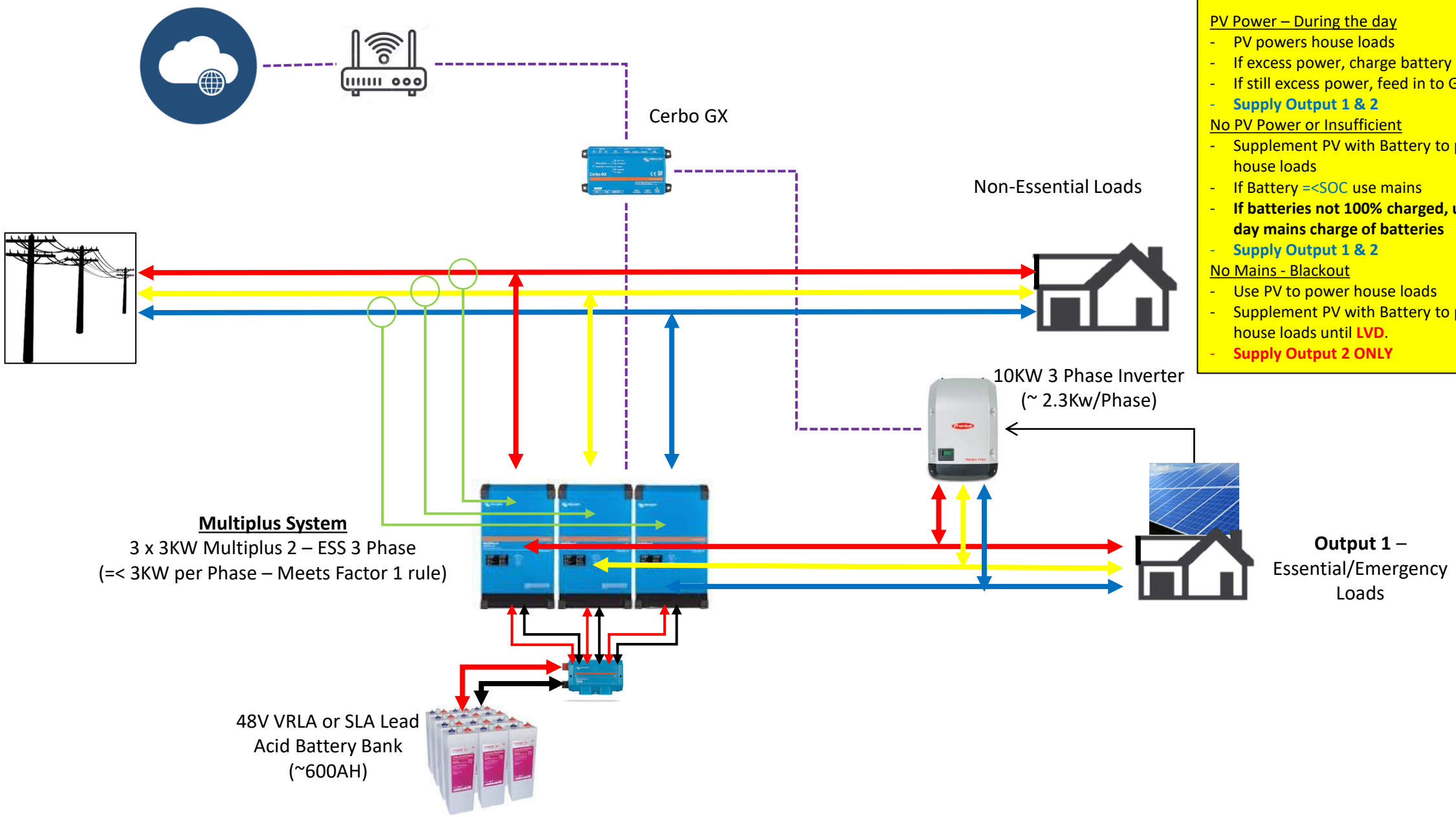

Required Functionality – Multiplus System

PV Power – During the day
- PV powers house loads
- If excess power, charge battery
- If still excess power, feed in to Grid
- **Supply Output 1 & 2**

No PV Power or Insufficient
- Supplement PV with Battery to power house loads
- If Battery =<SOC use mains
- **If batteries not 100% charged, use time of day mains charge of batteries**
- **Supply Output 1 & 2**

No Mains - Blackout
- Use PV to power house loads
- Supplement PV with Battery to power house loads until **LVD**.
- **Supply Output 2 ONLY**