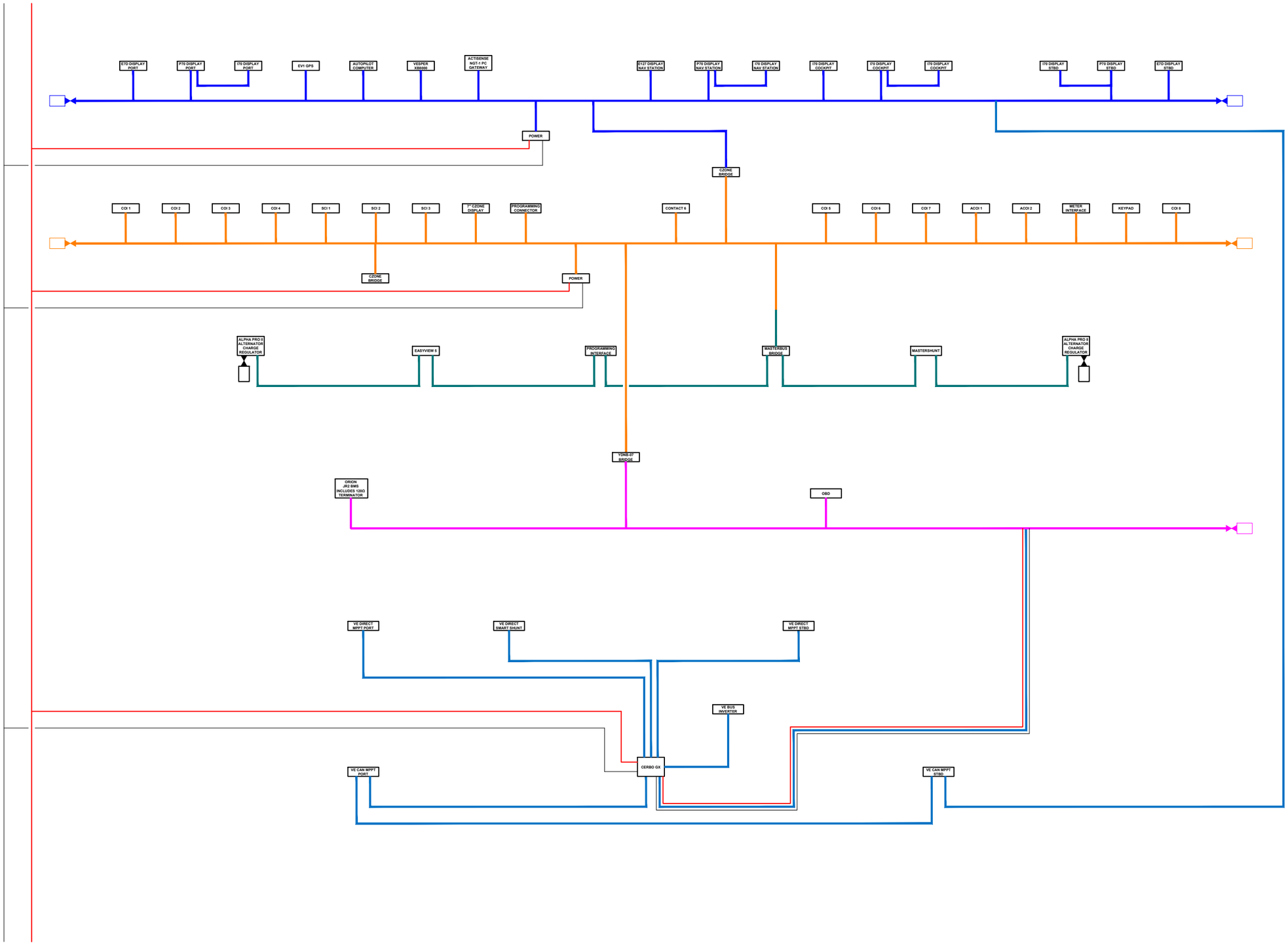

NOTES

1. MASTERBUS POWER NOT SHOWN, AS POWERED FROM SHUNT VIA THE LARGE CABLES THAT PASS THROUGH THE SHUNT

2. BMS CAN NETWORK POWERED THROUGHVE CAN CONNECTION TO THE NETWORK

BILL OF MATERIALS	QTY.